BODY, CENTER CONSOLE - Z26SPD92AN/AH/BN/BH (C750235)

2026 RZR - RZR PRO S ULTIMATE (R01) - Z26SPD92AN/AH/BN/BH

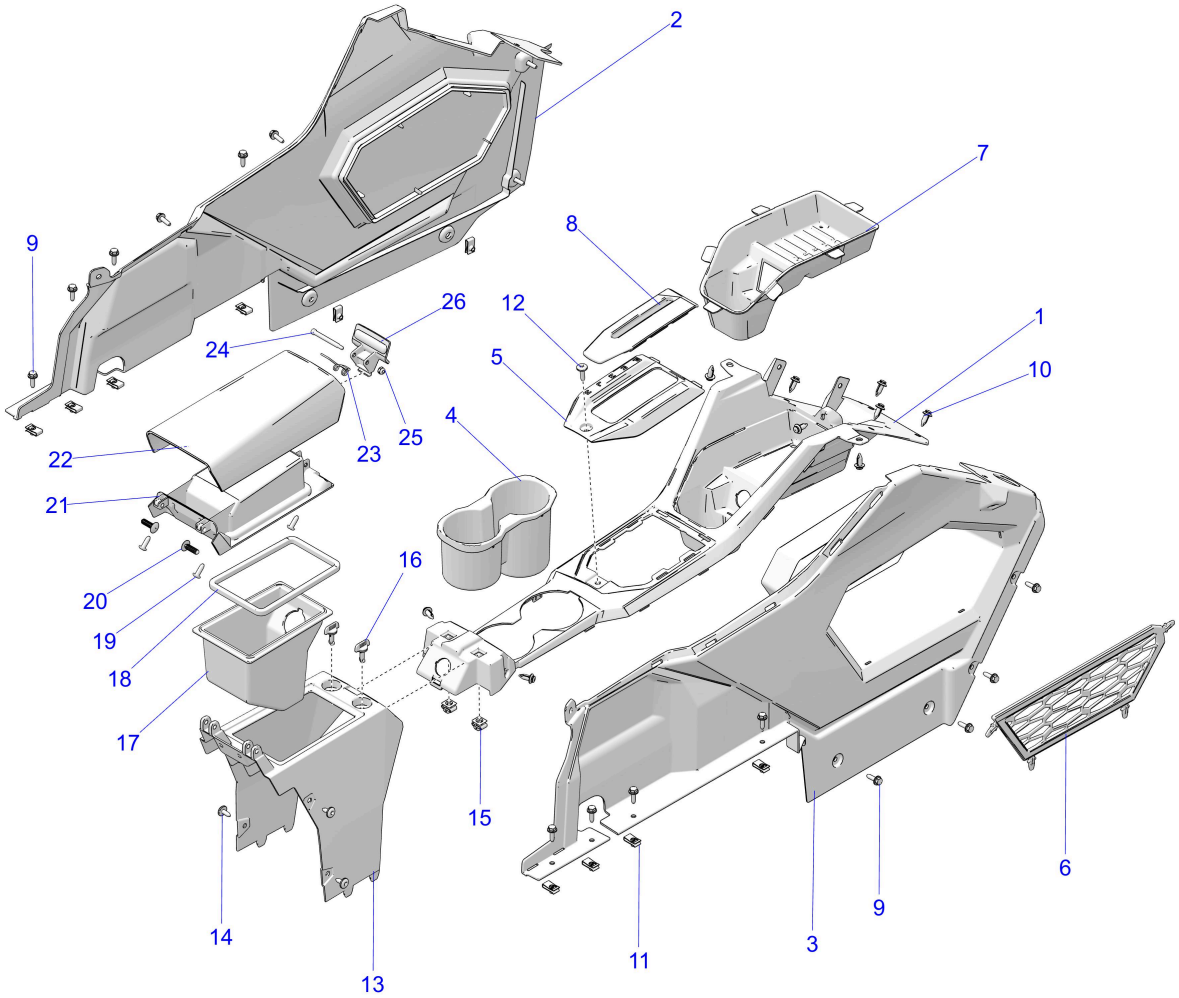

© 2023 Polaris Industries Inc. C750235

Reference #	Part#	Description	Quantity
1	5465086-A45	FENDER-RR,OUT,RZR,PNT,LH,E.B.S [EARTH BLUE SMOKE][AN/BN]	1
1	5465086-A29	FENDER-RR,OUT,RZR,PNT,LH,H.GRY [HIDDEN WARM TONE GREY][AH/BH]	1
2	5455358-070	CONSOLE-CENTER,LH,BLK	1
3	5455359-070	CONSOLE-CENTER,RH,BLK	1
4	5455779	HOLDER-CUP	1
5	5456354-070	PANEL-SHIFT COVER,BLK	1
6	5416934	NET-CONSOLE,STORAGE	1
7	5416935	LINER-CONSOLE,STORAGE	1
8	5417298	PAD-SHIFTER	1
9	7518529	SCR-M6X1.0X20,HXHD,FLG,TDFM,BK	16
10	7661855	RIVET-TUFLOK,.315-.325X.787	AR
11	7081305	CLIP-U SPEED NUT	AR
12	7519650	SCR-TXTH-M6X1.0X25 ZFB	1
13	5456705	CONSOLE-CENTER,REAR	1
14	7518936	SCR-M6X1X16 TR/TX-M	4
15	7710933	CLIP-1/4 TURN	2
16	7662384	STUD-1/4 TURN,NYLON	2
17	5455606	BIN-CONSOLE,STORAGE,REAR	1

18	5417747	SEAL-CONSOLE	1
19	7519045	SCR-TX TRUSS-#14X3/4, HI/LO ZBK	4
20	7670078	CLIP-PLASTIC DART, NYLON, P157	2
21	5455603-070	BIN-CONSOLE,STORAGE,RR,UPR,BLK	1
22	5455608-070	LID-CONSOLE STORAGE,RR,UPR,BLK	1
23	7045213	SPRING-LATCH,CONSOLE,STORAGE	1
24	7512266	SCR-SH-1/4X2 SAE4037 BLKOX&OIL	1
25	7541906	NUT-10-24-FLEX LOC-Z	1
26	5455602-070	LATCH-STORAGE,CONSOLE,BLK	1

Copyright 1996-2026 Polaris Industries U.S.A All rights reserved.